DETAIL #:
0540-1462
Aussie Tite 540

Multiple Pipe Penetration

AVM INDUSTRIES INC

AVM AUSSIE TITE 540

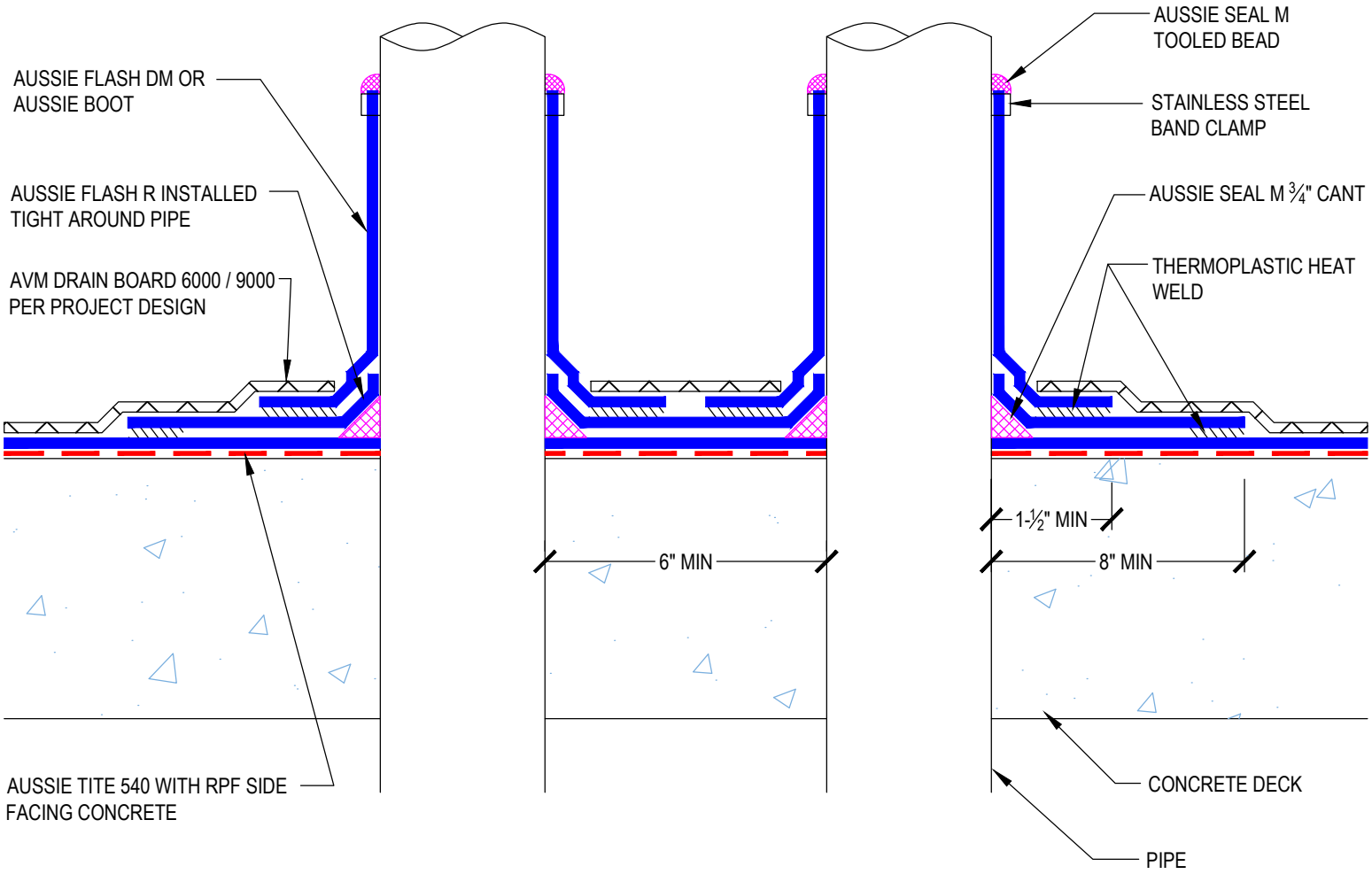

AVM Industries, Inc.
8245 Remmet Ave, Canoga Park, CA 91304

Quality Waterproofing Products

888.414.1041 818.888.0050
www.avmindustries.com

FILE NAME: 0540-1462

Protected by Copyright - AVM Industries, Inc. Revision Date 2/2/2021